Manfrotto nord

ART.
055B

VERSIONE: 010
DEL: 1999-02-09

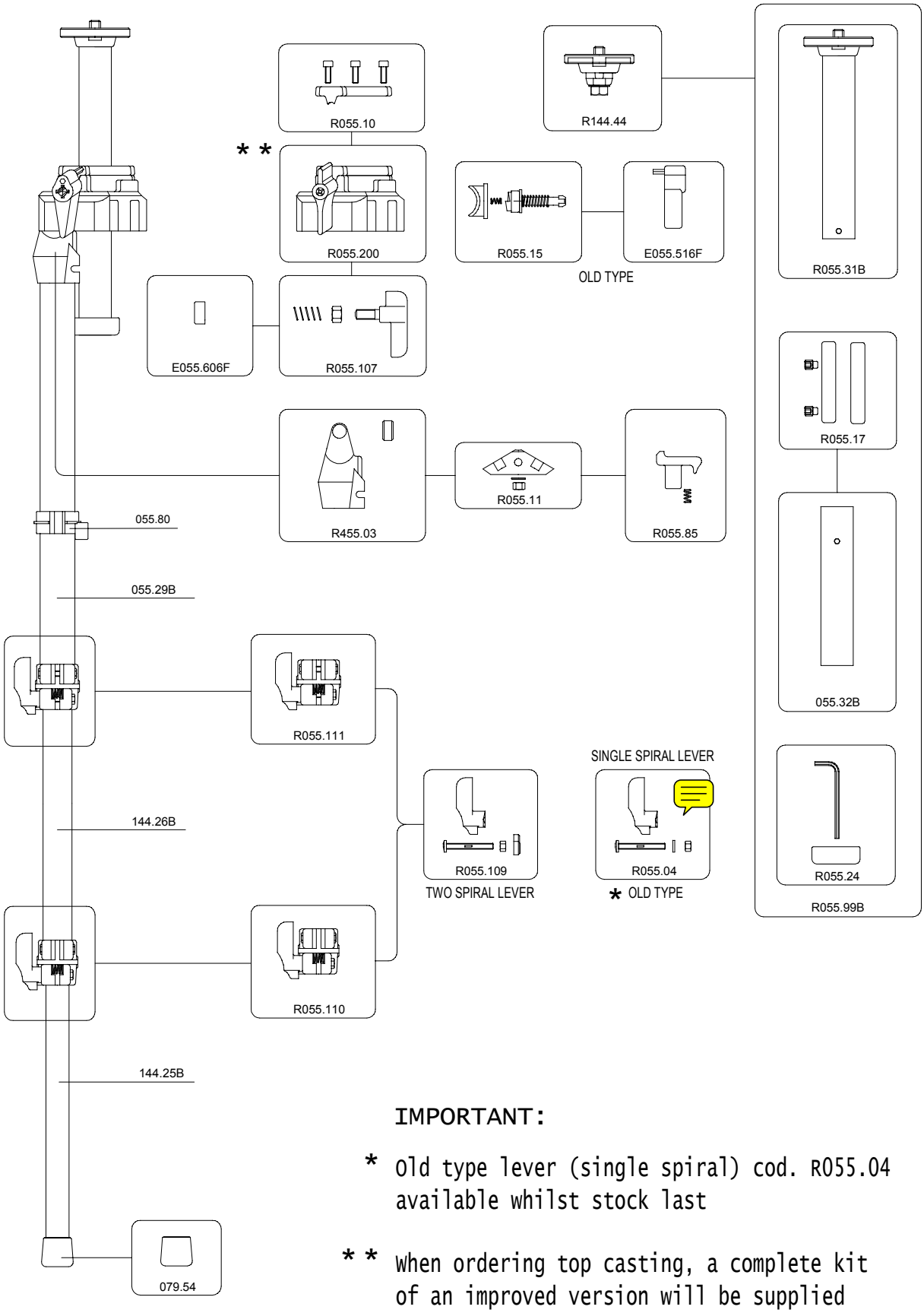

IMPORTANT:

* Old type lever (single spiral) cod. R055.04 available whilst stock last

* * When ordering top casting, a complete kit of an improved version will be supplied